Data sheet for three-phase squirrel-cage motor

Type T3C 160L-4 | **Cod. R160L415,03B5C00000T** | **Mounting position**

IM	B3
IM	1001

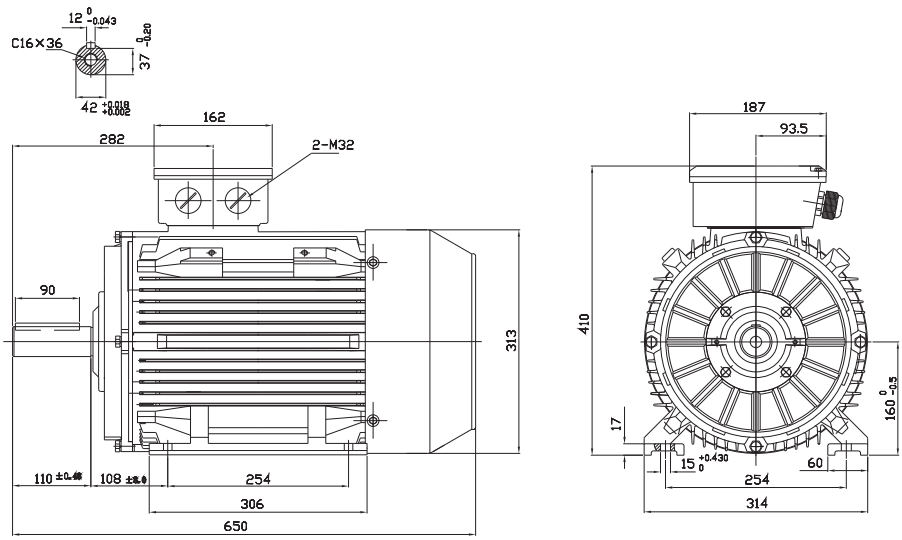

Electrical data			
Rated motor power	15		Kw
Rated motor speed	1450		min^{-1} 50Hz
	1740		min^{-1} 60Hz
Rated motor frequency	50		Hz
Rated motor voltage(+/-10%)	400		VΔ/50Hz
	690		VY/50Hz
	480		VΔ/60Hz
	830		VY/60Hz
Rated motor torque	98.83		Nm (Mn)
Rated motor current	27.33	VΔ/50Hz	A (In)
	15.8	VY/50Hz	A (In)
Starting motor current	8.5		xIn
Starting motor torque	2.5		xMn
Breakdown motor torque	2.8		xMn
Starting			D.O.L.
Efficiency class	IE3		
Efficiency	50Hz	60Hz	
	92.1	93	100% load
	92.9	93.7	75% load
	92.2	92.3	50% load
Power factor cosφ	0.86	0.86	100% load

General data		
Frame size	160	
Mounting	B3	
Weight	148.6	Kg
Casing material	Cast iron	
Protection	IP	55
Insulation class	H	
Tropicalization	Yes	
Vibration class	A	
Duty	S1	
Direction of rotation	Bidirectional	
Method of cooling	IC	411
Cable entry	2-M32x1,5+1M16x1,5	
Standards	IEC/DIN/ISO/VDE/EN	
Execute at Standard	IEC 60034-1	
Feet removable	Yes	
Paintwork	RAL 7024	Standard
Thermal protections	n/a	

Site conditions	
Ambient temperature	from -20°C to +40°C
Altitude above sea level	1000 m

Mechanical data						
Noise level	LpA	67	dB(A)	Bearing DE side	6309ZZ-C3	
	LwA	76	dB(A)	Bearing NDE side	6309ZZ-C3	
Moment of inertia	0.1375		Kgm²	Average bearing lifetime	40000	h
Bearings type			NSK	Relubrication interval L1 DE bearing	21500	h
Lubricants for bearings	See installation and maintenance manual			Relubrication interval L1 NDE bearing	21500	h
				Compensation ring	NDE SIDE	standard

There may be differences between rating plate and calculated values.

SHANGHAI TOP MOTOR CO., LTD
NO.303 Kangliu Road Kangqiao Town, Pudong, Shanghai, 201315, China
Tel: +86-21-68192006

www.techtop.com