Data sheet for three-phase squirrel-cage motor

Type T3A 100L-6 | **Cod. R100L601,54A5A00000T** | **Mounting position**

IM	B14
IM	3601

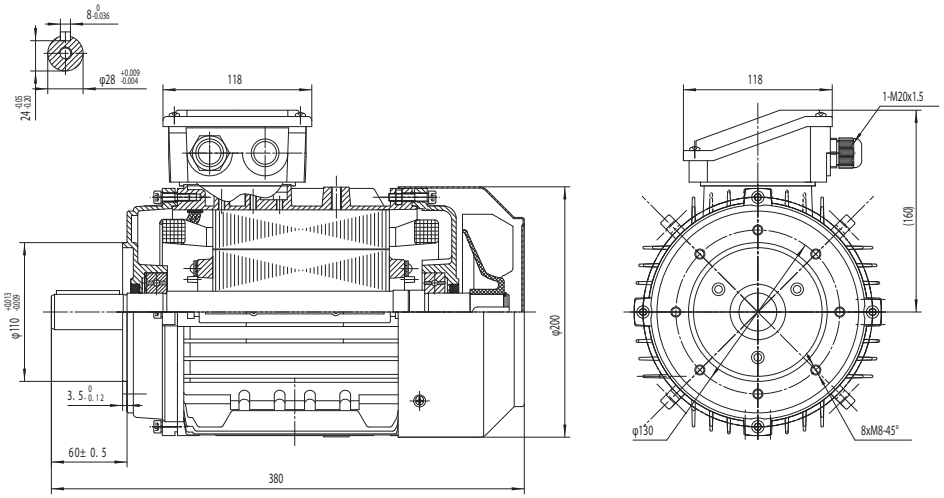

Electrical data			
Rated motor power	1.5		Kw
Rated motor speed	955		min^{-1} 50Hz
	1150		min^{-1} 60Hz
Rated motor frequency	50		Hz
Rated motor voltage(+/-10%)	230		VΔ/50Hz
	400		VY/50Hz
	280		VΔ/60Hz
	480		VY/60Hz
Rated motor torque	15.01		Nm (Mn)
Rated motor current	6.53	VΔ/50Hz	A (In)
	3.77	VY/50Hz	A (In)
Starting motor current	5.5		xIn
Starting motor torque	2.4		xMn
Breakdown motor torque	2.9		xMn
Starting			D.O.L.
Efficiency class	IE3		
Efficiency	50Hz	60Hz	
	82.5	82.8	100% load
	83	82.2	75% load
	81.8	81.6	50% load
Power factor cosφ	0.7	0.7	100% load

General data		
Frame size	100	
Mounting	B14	
Weight	22	Kg
Casing material	Aluminum	
Protection	IP	55
Insulation class	H	
Tropicalization	Yes	
Vibration class	A	
Duty	S1	
Direction of rotation	Bidirectional	
Method of cooling	IC	411
Cable entry	2-M20x1,5	
Standards	IEC/DIN/ISO/VDE/EN	
Execute at Standard	IEC 60034-1	
Feet removable	Yes	
Paintwork	RAL 7024	Standard
Thermal protections	n/a	

Site conditions	
Ambient temperature	from -20°C to +40°C
Altitude above sea level	1000 m

Mechanical data						
Noise level	LpA	66	dB(A)	Bearing DE side	6206-2RS-C3	
	LwA	76	dB(A)	Bearing NDE side	6206-2RS-C3	
Moment of inertia	0.00914		Kgm²	Average bearing lifetime	40000	h
Bearings type			NSK	Relubrication interval L1 DE bearing	life	h
Lubricants for bearings	See installation and maintenance manual			Relubrication interval L1 NDE bearing	life	h
				Compensation ring	NDE SIDE	standard

There may be differences between rating plate and calculated values.

SHANGHAI TOP MOTOR CO., LTD
NO.303 Kangliu Road Kangqiao Town, Pudong, Shanghai, 201315, China
Tel: +86-21-68192006

www.techtop.com